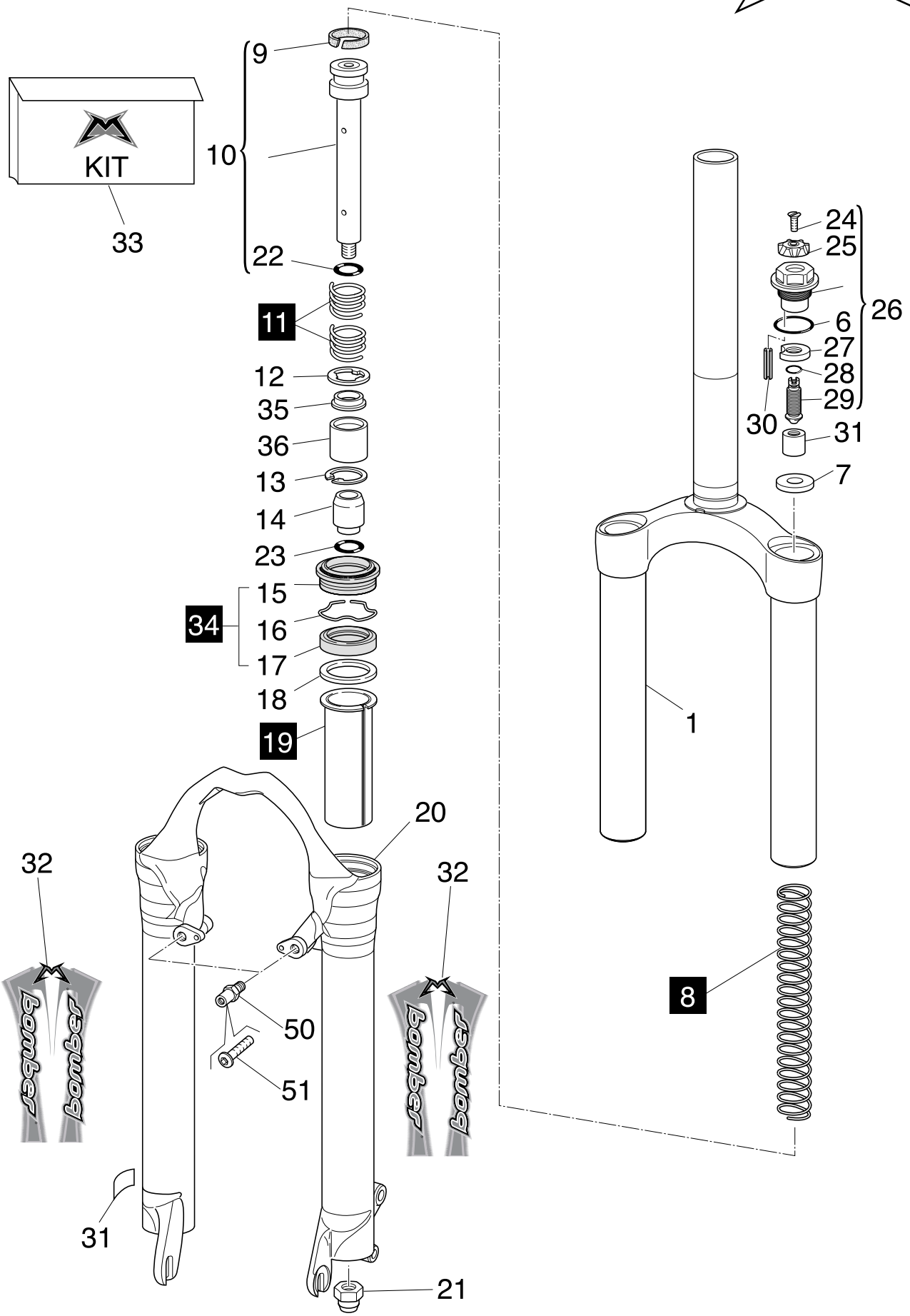

MARZOCCHI M.Y.2002 MXC Coil c.80(with ext.Prel.)