
# 2005 - D-Street 24"

## Technical instructions

## Exploded view - D-Street 24" 80

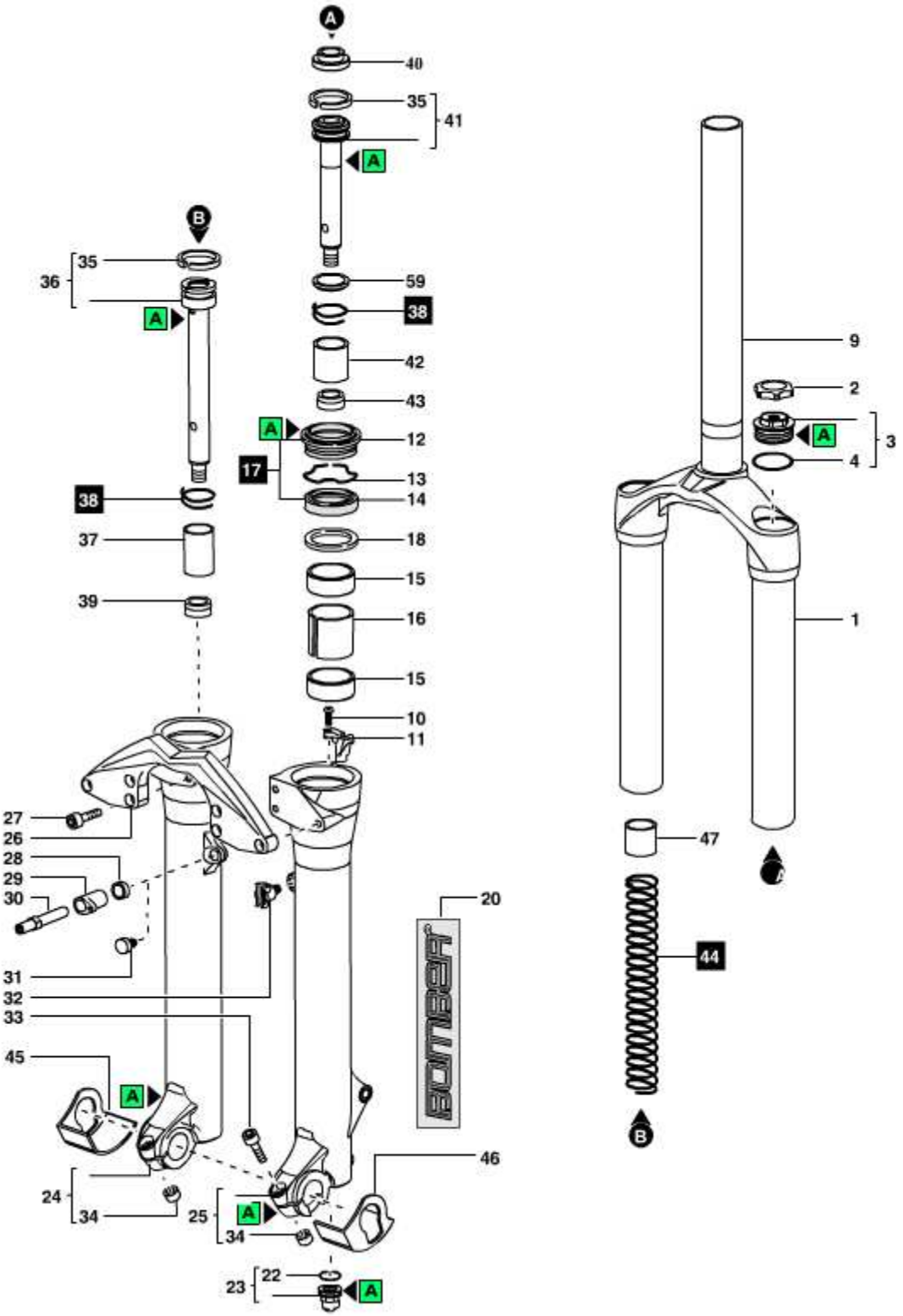


| Rif. | Code | Quantity |
|---|---|---|
| 1 | 818308/R | 1 |
| 1 | 818308/A | 1 |
| 2 | 549072AQ | 2 |
| 3 | 701239/C | 2 |
| 4 | 528188 | 2 |
| 9 | 508996CD/C | 1 |
| 10 | 520341 | 1 |
| 11 | 5321153>A | 1 |
| 12 | 533297 | 2 |
| 13 | 523261 | 2 |
| 14 | 528230>A | 2 |
| 15 | 538115 | 4 |
| 16 | 529196>A | 2 |
| 18 | 522403>A | 2 |
| 20 | 547617 | 1 |
| 22 | 528046 | 2 |
| 23 | 5321130>B | 2 |
| 24 | 5031688RS/M | 1 |
| 24 | 5031688RR/M | 1 |
| 25 | 5031687RS/M | 1 |
| 25 | 5031687RR/M | 1 |
| 26 | 5321233RS | 1 |
| 26 | 5321233RR | 1 |
| 27 | 520279QF | 6 |
| 28 | 522422AD | 2 |
| 29 | 5321114 | 2 |
| 30 | 5321242QF | 2 |
| 31 | 5321106 | 1 |
| 32 | 5321158>A | 1 |
| 33 | 520289 | 2 |
| 34 | 526154AA | 2 |
| 35 | 524183 | 2 |
| 36 | 8031228/C | 1 |
| 37 | 5181330 | 1 |
| 38 | 5141131/C | 1 |
| 39 | 512098>C | 1 |
| 40 | 519064>A | 1 |
| 41 | 8031230/C | 1 |
| 42 | 5181329>A | 2 |
| 43 | 512100>A | 1 |
| 44 | 5141301/C | 1 |
| 45 | 9001004-10 | 1 |
| 46 | 9001005-10 | 1 |
| 47 | 5181251 | 1 |
| 59 | 522425 | 1 |

## D-Street 24" 80 - Oil levels

| Position | Oil type | Quantity (cc) |
|---|---|---|
| Right fork leg | SAE 7,5 - 550013 | 185 |
| Left fork leg | SAE 7,5 - 550013 | 185 |

## Spare part list - D-Street 24" 80

| Rif. | Code | Description | Q.ty in the model |
|---|---|---|---|
| 1 | 818308/R | **CROWN+STANCH D-STREET 05** | 1 |
| 1 | 818308/A | **CROWN+STANCH+STEEL STEM DSTR05** | 1 |
| 2 | 549072AQ | **ALUMINUM KNOB** | 2 |
| 3 | 701239/C | **DJ 2004 PLUG UNIT** | 2 |
| 4 | 528188 | **O-RING** | 2 |
| 9 | 508996CD/C | **REINFORCED STEEL STEM 1 1/8** | 1 |
| 10 | 520341 | **SCREW** | 1 |
| 11 | 5321153>A | **CABLE GUIDE** | 1 |
| 12 | 533297 | **DUST SEAL DIA.32** | 2 |
| 13 | 523261 | **STOP RING** | 2 |
| 14 | 528230>A | **OIL SEAL DIA.32** | 2 |
| 15 | 538115 | **UPPER BUSHING DIA.32** | 4 |
| 16 | 529196>A | **SLEEVE** | 2 |
| 18 | 522403>A | **WASHER** | 2 |
| 20 | 547617 | **LH+RH LABELS DJ-STREET 05** | 1 |
| 22 | 528046 | **O-RING** | 2 |
| 23 | 5321130>B | **FOOT NUT UNIT** | 2 |
| 24 | 5031688RS/M | **ECO BLACK RH SLIDER** | 1 |
| 24 | 5031688RR/M | **FLAT BLACK RH SLIDER** | 1 |
| 25 | 5031687RS/M | **ECO BLACK LH SLIDER** | 1 |
| 25 | 5031687RR/M | **FLAT BLACK LH SLIDER** | 1 |
| 26 | 5321233RS | **ECO BLACK ARCH STREET DJ** | 1 |
| 26 | 5321233RR | **FLAT BLACK ARCH STREET DJ** | 1 |
| 27 | 520279QF | **SCREW** | 6 |
| 28 | 522422AD | **WASHER** | 2 |
| 29 | 5321114 | **PIN ADAPTOR** | 2 |
| 30 | 5321242QF | **CANTILEVER PIN-STREET DJ 04** | 2 |
| 31 | 5321106 | **RUBBER** | 1 |
| 32 | 5321158>A | **CABLE GUIDE** | 1 |
| 33 | 520289 | **SCREW** | 2 |
| 34 | 526154AA | **BUSHING** | 2 |
| 35 | 524183 | **PISTON RING** | 2 |
| 36 | 8031228/C | **DJ3 '04 PUMPING ROD TRAVEL 110** | 1 |
| 37 | 5181330 | **PRELOAD SLEEVE LONG 46** | 1 |
| 38 | 5141131/C (replaces 850272/C) | **REBOUND SPRING KIT** | 1 |
| 39 | 512098>C | **FOOT BUFFER** | 1 |
| 40 | 519064>A | **SPRING GUIDE** | 1 |
| 41 | 8031230/C | **PUMPING ROD-DJ 2004 ECO** | 1 |
| 42 | 5181329>A | **PRELOAD SLEEVE** | 2 |
| 43 | 512100>A | **FOOT BUFFER** | 1 |
| 44 | 5141301/C | **SPRINGS KIT K=5.0** | 1 |
| 45 | 9001004-10 | **MTB'04 STAINL.STEEL RH FENDER** | 1 |
| 46 | 9001005-10 | **LH SLIDER GUARD-DJ 04** | 1 |
| 47 | 5181251 | **PRELOAD SLEEVE** | 1 |
| 59 | 522425 | **REBOUND SPRING WASHER** | 1 |

## Technical characteristics: Technical characteristics

Single-crown fork with ø 32mm legs.

**Available travels:** 80 mm.

**Right fork leg damping element:** spring (air pre-load).

**Left fork leg damping element:** spring (air pre-load).

**Right fork leg damping system:** non-adjustable SSV pumping element.

**Lef fork leg damping system:** non-adjustable SSV pumping element.

The stanchion tubes are pressed into the crown.

New sliding system to improve stiffness and operation.

Lubrication and cooling of the parts subject to friction with a specially formulated oil.

**Steer tube:** reinforced steel, 1-1/8", threadless.

**Crown:** BAM® aluminium alloy forged and CNC machined.

**Stanchions:** steel.

**Sliders:** aluminium alloy, CNC machined.

**Arch:** aluminium alloy, CNC machined, to improve the structural stiffness of the fork.

**Sliding bushings:** made of friction-free and wear-free material.

**Springs:** constant pitch.

**Seals:** computer designed oil seals that guarantee maximum seal in any condition.

**Oil:** specially formulated oil that prevents foam and keeps the viscosity unchanged while offering high performance; free from static friction.

**Dropout type:** ø 20mm through-axle.

**Disk brake mount:** XC International Standard for 6" disk (fitting the special adapter supplied by the brake system manufacturer you can install the 8" disk).

**V-Brake fit:** removable.

**Max wheel size:** 2.8" x 26".

**BAM® : Bomber Aerospace Material: special alloy coming from the aerospace industry.**

## Warnings: Instructions for use

MARZOCCHI forks are based on an advanced technology coming from the company's years long experience in the professional mountain bike industry.
For the best results, we recommend inspecting and cleaning the area below the dust seal and the stanchion tube after every use and lubricating the parts with some silicone oil.
MARZOCCHI forks usually offer the best performances since the very first rides. Notwithstanding this, a short running-in period may be necessary (5-10 hours) to adjust the internal couplings. This precaution will lengthen your fork's life and guarantee its best performances.
We recommend changing the oil at least every 100 hours.
The forks with a polished finish must be treated periodically with polishing paste to keep the exterior shining like new.

## Warnings: General safety rules

After disassembling the forks, always use new, original Marzocchi seals when reassembling.
To tighten two bolts or nuts that are near each other, always follow the sequence 1-2-1, and tighten to the required tightening torque.
Before reassembly, wash all new and old components and dry them with some compressed air, making sure there are neither breaks nor burrs.
Never use flammable or corrosive solvents when cleaning the forks, as these could damage the fork's seals. If you must use a solvent, use biodegradable detergents that are not corrosive, non-flammable, or have a high flash point.
Before reassembling, always lubricate those components that are in contact with the fork's oil.
If you are planning not to use your forks for a long period of time, always lubricate those components that are in contact with the fork's oil.
Always collect and keep any lubricants, solvents, or detergents, which are not completely biodegradable in the environment. These materials should be kept in appropriate containers, and disposed of according to local laws.
Always grease the seal lips before reassembling.
All of the components of Marzocchi forks require the use of metric tools. Use only metric tools. Imperial (US) tools may have similar sizes, but can damage the bolts, making them impossible to loosen or tighten.
When using a screwdriver to assemble or disassemble metal stop rings, O-rings, sliding bushings, or seal segments, avoid scratching or cutting the components with the screwdriver tip.
Do not carry out any maintenance and / or adjustment operations that are not explained in this manual.
Only use original Marzocchi spare parts.
Before servicing the fork, we recommend washing the fork thoroughly.
Work in a clean, organized, and well-lit place. If possible, avoid servicing your forks outdoors.
Carefully check to see that your work area is free of dust and metal shavings from any component of the forks.
Never modify your fork in any way.

## Warnings: Fitting the fork onto the frame

The fork is supplied with "A-Head Set" steer tube to be cut to size according to frame being used.
Fitting the fork onto the bike frame is a very delicate operation that must be carried out at one of our service centres only.
The assembling on the frame and the adjustment of the steer tube must be carried out following the instructions of the steering set manufacturer.
**A wrong installation can be dangerous for the rider.**
**Marzocchi does not guarantee the assembly and accepts no liability for damage and/or accidents arising from a wrong installation.**
The steer tube must be pressed into the crown; its replacement must be carried out by one of our service centres using the adequate tools.
**A wrong installation of the steer tube into the crown may cause the rider to lose the control of the bike and lead to serious personal injury.**

## Warnings: Installing the disk brake

Installing the brake system is a delicate and critical operation that must be carried out by an authorized Marzocchi Service Center.
Marzocchi is not responsible for the installation and accepts no liability for damage and/or accidents arising from this operation.
Improper installation of a disk brake system can overstress the caliper mountings, which may cause the caliper mountings to break, resulting in loss of control of the bicycle, an accident, personal injury, or death. Be sure that the brake system installation is also performed in strict compliance with the instructions provided by the brake system manufacturer.
**Improper installation can result in an accident, personal injury, or death.**
Use only brake systems that comply with the forks specifications.

**Make sure, after installation, that the brake cable of the brake system is correctly connected to the proper mounting (A).**

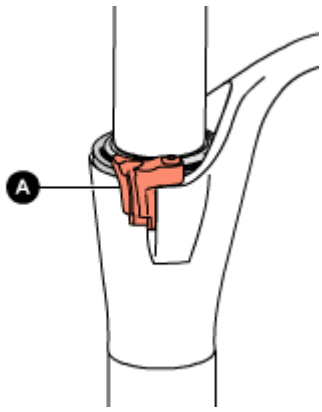

**The brake cable must never touch the crown and stanchions.**

## Warnings: Installing the V-brake

Installing the brake system is a very delicate operation that must be carried out at our specialised service centres only.
Marzocchi does not guarantee the installation and accepts no liability for damage and/or accidents arising from a wrong installation.
**Improper installation of the disk brake system can overstress the caliper mountings, which may break. The installation of the brake system must be carried out following the instructions of the brake system manufacturer. Improper installation can be dangerous for the rider.**
Use only brake systems in accordance with the fork specifications.

**If the fork does not come standard with V-brake mounts, after removing the cable guide (A) and the disk brake mount cap (B), install the adapter (A) and the bolt (D) on both legs, check that the adapter is correctly oriented as shown and tighten the bolt to the recommended tightening torque (9 Nm ±1).**
**On the thread of bolts (D) a special anti-unscrewing treatment has been applied; as a result, the removed bolts cannot be re-used as they lose such treatment.**

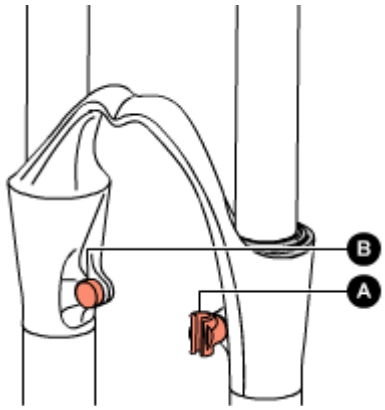


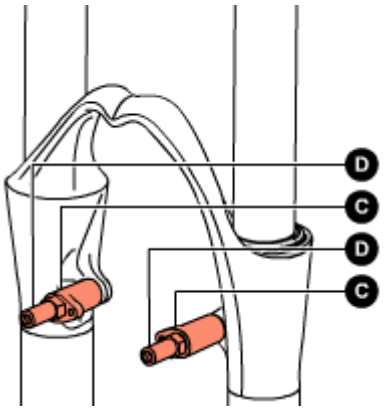


## Warnings: Assembling the wheel

For a correct operation of the fork, install the wheel as explained below:
Align the center of the wheel with each wheel axle clamp.
Insert the wheel axle (**1**) through the right dropout, the wheel and the left dropout.
With the 6mm Allen wrench act on cap (**2**) and tighten the wheel axle to the recommended tightening torque (**15 Nm ± 1**).
Check for the proper fork-wheel alignment. To do this, begin by fully compressing the fork a few times. The wheel should not make contact with, or come close to any portion of the fork.
Then lift the front of the bicycle and spin the wheel a few times to verify the correct alignment with the disk brake. The wheel should not wobble from side to side or up and down. Check the owner's manual of the brake system for the proper specifications.

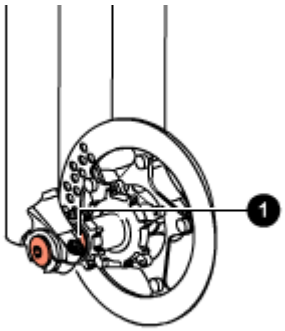

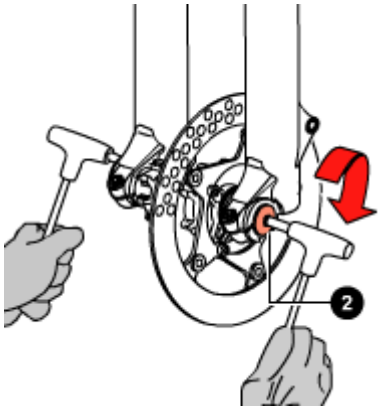


With a 5mm Allen wrench, tighten screws (**3**) on both dropouts to the recommended tightening torque (**10 Nm ± 1**).

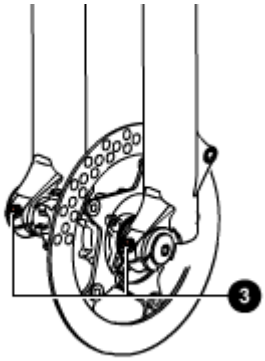

## Dismantling: Removing the top caps

Put the fork in the vice in vertical position, fixing it by the dropouts.

Remove the protection cap (**1**).

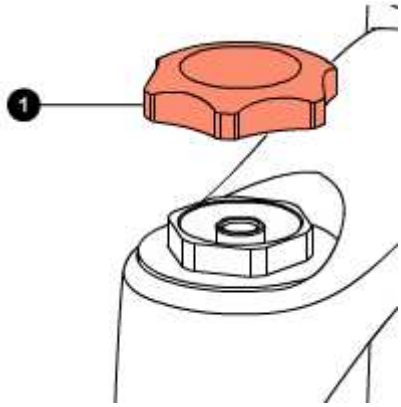


Using a small pin screwdriver, blow the air off the fork leg, pushing on the air valve.
Fully unscrew lock cap (**2**) with a 21mm socket spanner.
Remove lock cap (**2**).

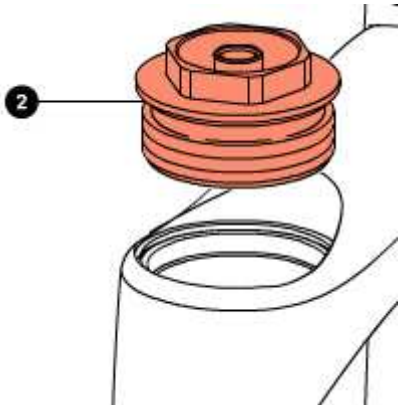


## Dismantling: Draining the oil

Remove the preload tube (**1**) and spring (**2**) from both legs.

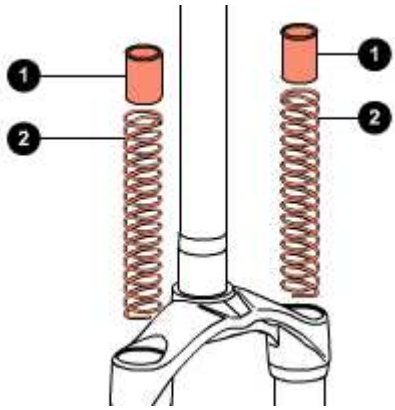


Free the fork from the vice and tip it into a container of a suitable size to drain the oil; compress the fork a few times to help the oil flow out.
**Do not pour used oils on the ground.**

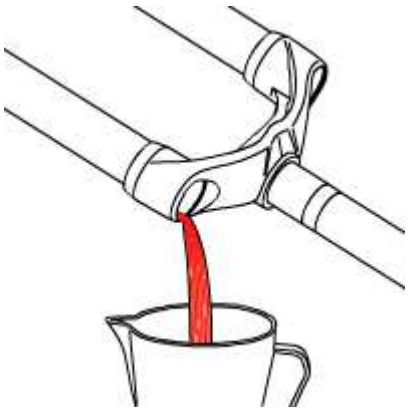

## Dismantling: Breaking down the steering crown unit / arch-slider unit

**Use the special spanner to remove the bottom nuts. Do not use other tools.**
Turn the arch-slider unit upside down.

Using the special 12mm spanner (**A**), loosen the bottom nuts (**1**) of both legs.
Pull the bottom nuts (**1**) complete with O-rings (**2**) out of both legs.

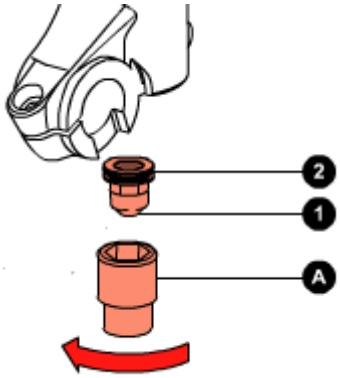


Pull the crown-stanchion unit (**3**) off the arch-slider unit (**4**).

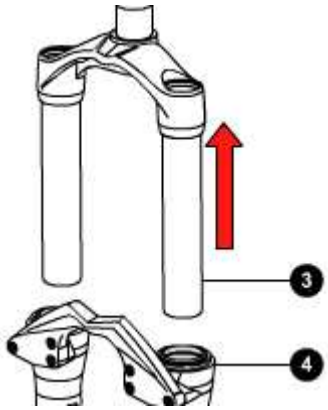


## Dismantling: Removing the right pumping element

Remove the bottom pad (**1**).

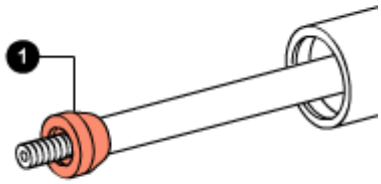


Pull out the pumping element (**3**), the preload tube (**9**) and the rebound spring (**7**).

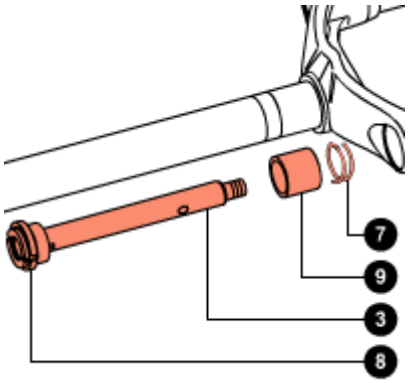


If the piston segment (**8**) is damaged, you can prize it off with a small flat-tip screwdriver.

## Dismantling: Removing the left pumping element

Remove the bottom pad (**1**).

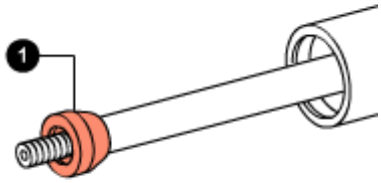


Pull out the pumping element (**3**) complete with spring guide cup (**13**), washer (**14**), the preload tube (**9**) and the rebound spring (**7**).

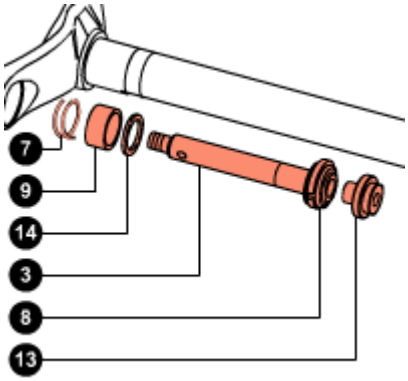


If the piston segment (**8**) is damaged, you can prize it off with a small flat-tip screwdriver.

## Dismantling: Removing the seals

Prize the dust seal (**1**) off its seat with a small flat-tip screwdriver.
**Take great care not to damage the internal surfaces of the slider while removing the dust seal.**

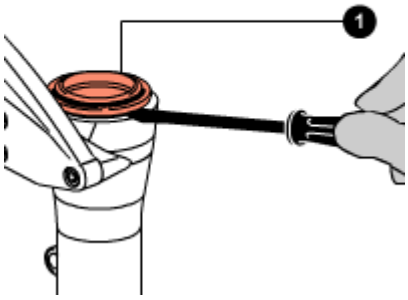


With the same screwdriver, prize off the metal stop ring (**2**).
**Take great care not to damage the internal surfaces of the slider while removing the stop ring.**


Protect the upper part of the slider with the special tool (**A**).
With a screwdriver, prize off the sealing ring (**3**).
Remove the sealing ring (**3**).
**Take great care not to damage the internal surfaces of the slider while removing the sealing ring.**

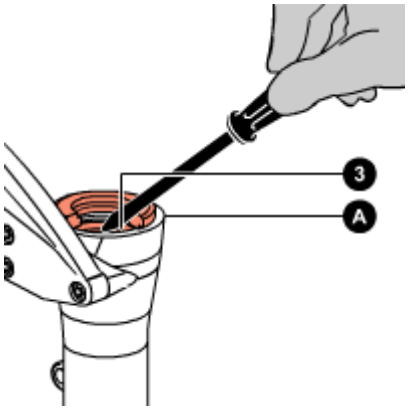


Remove the spring cup (**4**).

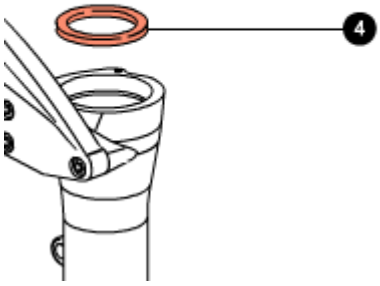


**The old sealing rings and dust seals must not be used again.**

## Dismantling: Removing the guide bushes

With a 4mm Allen wrench, loosen the 6 screws (**4**) fixing the arch.
Remove arch (**5**).
Separate sliders (**6**).

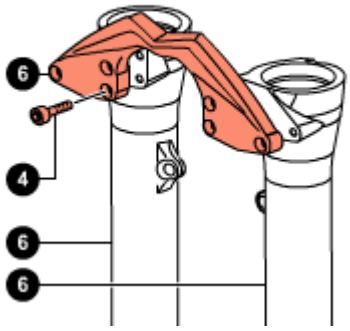


Knock the upper end of the slider against a wooden surface so that the top guide bush (**1**), the spacer (**2**) and the bottom guide bush (**3**) come out.
**Do this operation with extreme caution and hold the slider perpendicular to the wooden surface.**

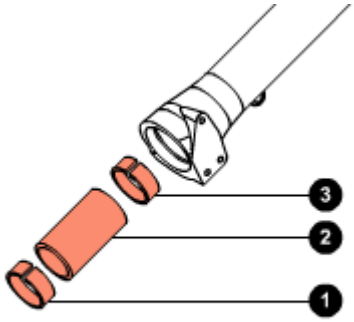


**If this operation is difficult by hand, use the bush extractor being very careful not to scratch the internal surfaces of the slider.**

## Assembling: Assembling the guide bushes

Fit the bottom guide bush (**3**).
Insert the bottom guide bush in the slider pressing it home with spacer (**2**).
Insert the top guide bush (**6**) in its seat.
**If necessary, use the special introducer to insert the guide bushes.**

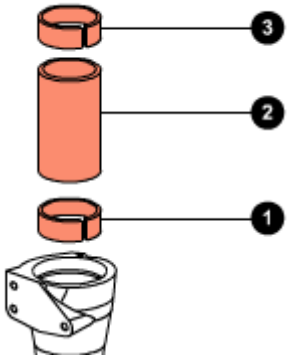


With a 4mm Allen wrench, tighten screws (**4**) fixing arch (**6**) to the sliders to the recommended tightening torque (**6 ± 1 Nm**) following the sequence 1-2-3-2-1.

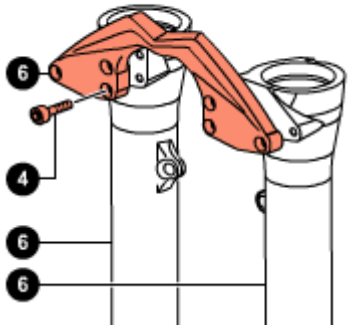


## Assembling: Assembling the seals

Insert the spring cup (**4**) in its seat.

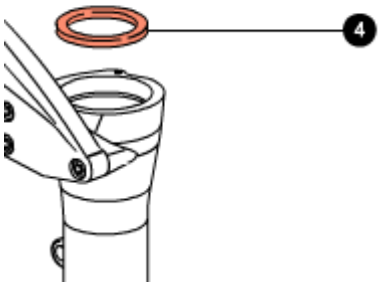


Smear the dust seal and the sealing ring with some grease.
Insert the sealing ring (**3**) in its seat with the special introducer (**A**).
Using a hammer, knock in introducer (**A**) and drive the sealing ring home into the slider.

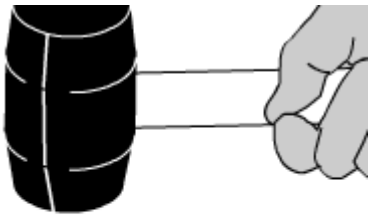

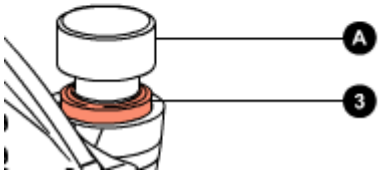


Using a small flat-tip screwdriver, fit the stop ring (**2**) and check that it fits perfectly into its groove.
**Take great care not to damage the internal surfaces of the slider when fitting the stop ring.**
The dust seals shall be refitted when reassembling the crown-stanchion / arch-slider units.

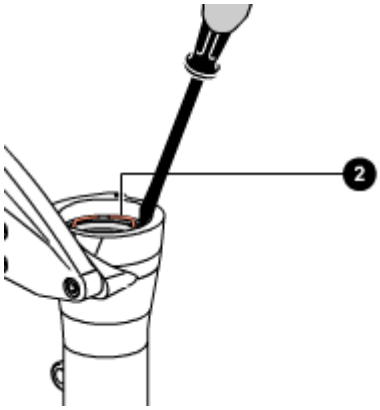


## Assembling:

**During the assembly of the pumping unit, strictly obey the instructions below.**
**Do not, at any times, reverse the position of the pumping elements in the fork legs (if you are unsure about anything, please refer to the relevant exploded view).**

## Assembling: Assembling the right pumping element

Replace the piston segment (**8**) if necessary.
Insert the preload tube (**9**) and the rebound spring (**5**) in the piston rod (**3**).
Insert the pumping element into the stanchion and check it fits perfectly into its groove.
**Take great care not to damage the segment and if necessary use a small flat-tip screwdriver to help the piston of the pumping element into the stanchion.**

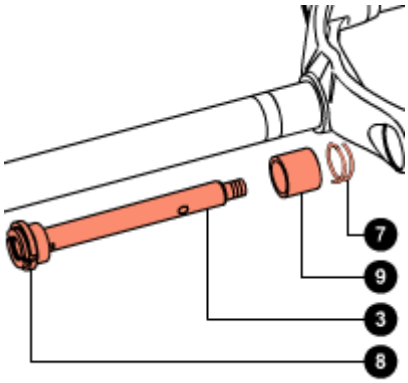


Fit the bottom pad (**1**) to the pumping element rod.

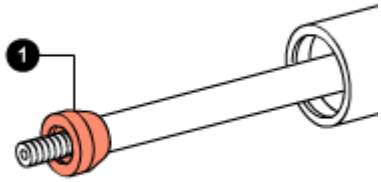


## Assembling: Assembling the left pumping element

Replace the piston segment (**8**) if necessary.
Fit the spring guide cup (**13**) to the pumping element.
Insert washer (**14**), the preload tube (**9**) and the rebound spring (**7**) in the piston rod (**3**).
Insert the pumping element into the stanchion and check it fits perfectly into its groove.

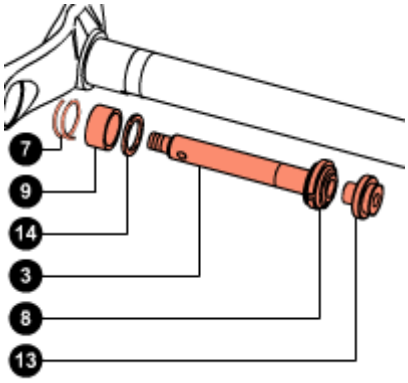


Fit the bottom pad (**1**) to the pumping element rod.

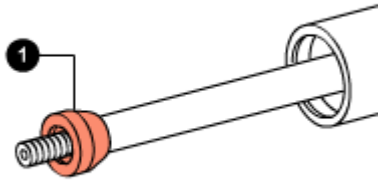


## Assembling: Reassembling the steering crown unit / arch-slider assembly

**A special spanner shall be used to assemble the bottom nuts. Do not, at any times, use other tools.**
Fit both dust seals (**11**) to the stanchions.

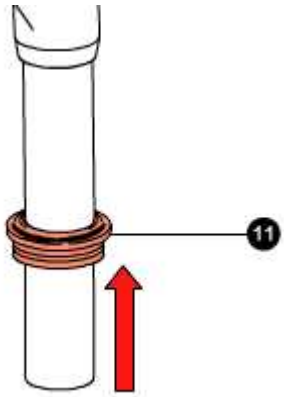


Insert the crown-stanchion unit (**3**) in the arch-slider unit (**4**).

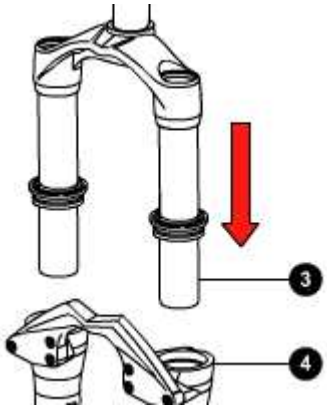


Using the special 12mm spanner, tighten the left bottom screw (**1**) complete with O-ring (**2**) to the recommended tightening torque (**10 Nm ± 1**).

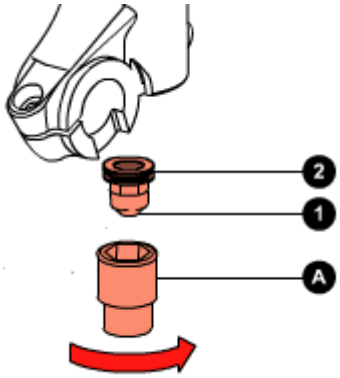


Using introducer (**A**) insert the dust seals (**11**) in their seats.

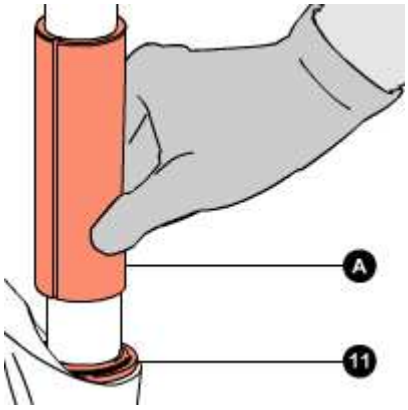


## Assembling: Filling with oil

Block the fork in the vice, in perfectly vertical position.

Fully lower the crown-stanchion unit on the arch-slider unit.

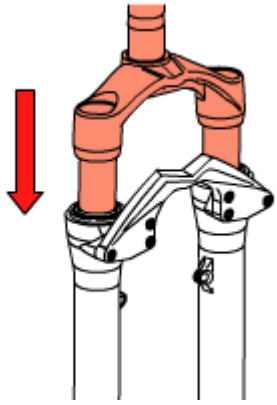

In a graduated recipient, prepare the quantity of oil to pour into the fork leg (see table).
Pour roughly 1/3 of the oil required into each stanchion, then pump the fork a few times to eliminate any traces of air.
Pour the rest of oil in.

**A lower or higher volume or a type of oil other than the one recommended can change the behaviour of the fork in every phase.**

Lift the crown-stanchion unit on the arch-slider unit.

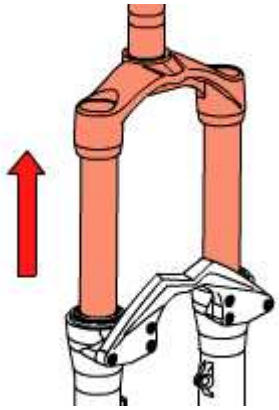

Insert spring (**2**) and the preload tube (**1**) in both legs.

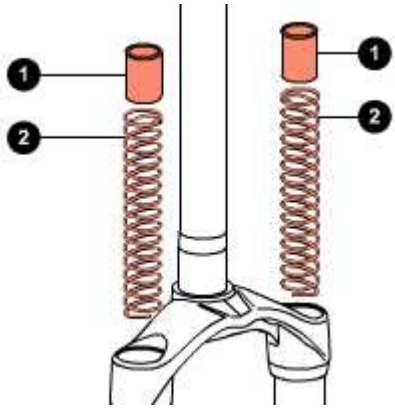


## Assembling: Mounting the top caps

Put the fork in the vice in vertical position, fixing it by the dropouts.

Check that O-ring is not damaged.
Using the 21mm socket spanner, tighten cap (**2**) to the recommended tightening torque (**10 Nm ± 1**).

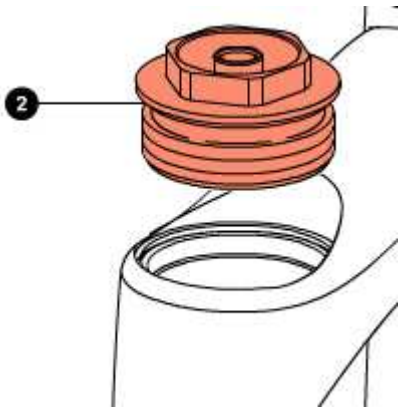


Restore the correct air pressure (see settings).
Fit the protection cap (**1**).

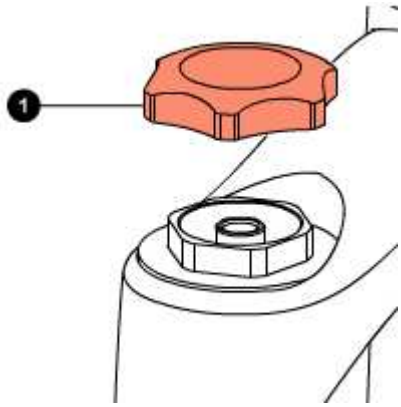

## Setting: General rules for calibration

By carefully calibrating the damping system you can get the maximum performance out of the same.
This paragraph indicates the sequence of operations to perform to set up the Marzocchi forks correctly.
In order to find the best settings for you, you will need to try several times to understand where and how to make adjustments. When doing so, please ride in an open area, free from traffic, obstacles and other hazards.
The optimal setting is influenced by the geometry of the frame of the mountain bike, the weight of the cyclist, the type of terrain the bike will be used on and the type of obstacles you have to deal with, but also by subjective factors associated with your riding style; therefore it is impossible to provide objective data on the desired settings.
Nevertheless by carefully following the instructions below you will soon be able to find the optimal setting for you.
The shock absorber must be calibrated simply by using one adjuster at a time, following the order explained, noting the operations and any result step-by-step.
**During setting don't force the adjusters beyond their limit of travel and don't exceed the max recommended air pressure.**
**To keep the pressure inside the fork's legs, only use the special MARZOCCHI pump with pressure gauge.**
**The use of any other pump can compromise the inflating operation and cause malfunction or damage to the fork, resulting in an accident, personal injury or death.**
*Once the correct setting has been found, we recommend noting the number of clicks or turns of the adjuster with respect to the "fully closed" position (adjuster fully clockwise) for a faster re-setting of your fork in case of need.*

## Setting: SAG

SAG means the fork bottoming under the biker's weight.
How to measure the SAG:
Follow these simple steps to measure the SAG.
On the leg portion of the fork, measure the distance between the lower crown and the dust seal (see Picture **A**). Note this value as "**H1**".
While sitting on the bike, repeat the measurement (see picture **B**). Note this value as "**H2**".
**SAG = H1 - H2**
How to find the best percent SAG:
The best percent SAG is 15-20% for Cross-country and All Mountain forks and 25-30% for Freeride and Downhill forks.
In order to calculate the best SAG for your own fork, you will need to make the following calculation:
**SAG = T x S** (**T** = total travel; **S** = suggested sinking percentage).

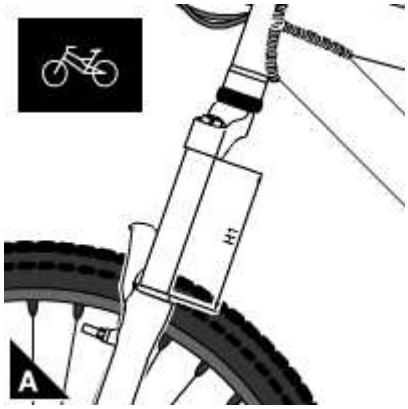


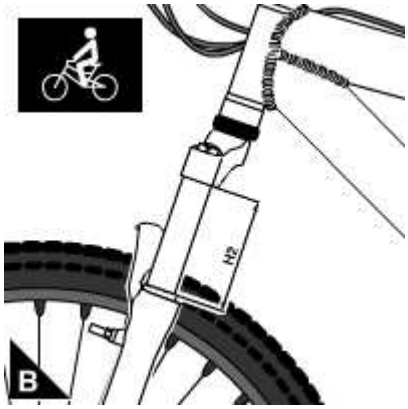


## Setting: Spring preload with air

The optimal spring preloading is the one that lets you obtain the desired SAG under the biker's weight.

Use the MARZOCCHI pump with pressure gauge to inflate the fork legs.
**Using inadequate tools may lead to a wrong inflation and result in a malfunctioning or damage to the fork.**
If you need to reduce the leg pressure, simply push the valve pin down with a pointed tool such as a small pin extractor.

**For both fork legs:**

To increase the pressure in the fork leg:
Remove the protection cap.
Tighten the threaded pump adapter on air valve.
Inflate till reaching the pressure you wish (see table).
Refit the protection cap.

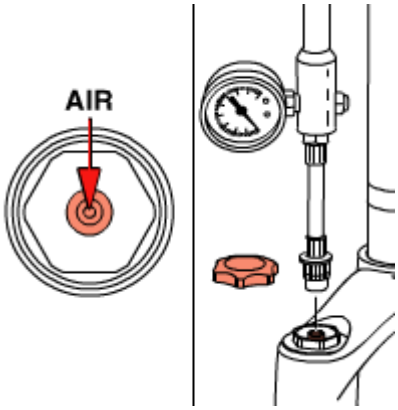


The pressure values in the table are given as a mere example and can be changed to meet the biker's riding style and the track condition.

## Tightening torques

| Components | Tightening torque (Nm) |
|---|---|
| Arch screw | 6±1 |
| Fork leg top caps | 10±1 |
| Pumping element/cartridge bottom nuts | 10±1 |
| V-brake locking pins | 9±1 |
| Wheel axle Allen screws | 10±1 |
| Wheel axle screws | 15±1 |

## Air pressures

### Preload air pressure

| User weight | | Air pressure | |
|---|---|---|---|
| kg. | lb. | bar | psi |
| 0 - 110+ | 0 - 242 | 0 - 1,00 | 0,00 - 1.450,00 |

## D-Street 24" 80 - Oil levels

| Position | Oil type | Quantity (cc) |
|---|---|---|
| Right fork leg | SAE 7,5 - 550013 | 185 |
| Left fork leg | SAE 7,5 - 550013 | 185 |

## Diagnostics

| Finding the problem | Finding the possible cause | Possible solutions proposed |
|---|---|---|
| Fork doesn't get full travel | Oil level too high | Check oil levels |
| Fork doesn't get full travel | Spring rate too stiff | Change to softer spring rate |
| Fork extends too quickly; harsh top-out after impacts | Rebound damping is not enough | Increase rebound damping |
| Fork extends too quickly; harsh top-out after impacts | Rebound damping is not enough | Replace the oil (SAE 7.5) with one of higher viscosity index |
| Fork has too much sag | Oil is too fluid | Check oil levels |
| Fork has too much sag | Spring rate too soft | Change to stiffer spring rate |
| Fork has too much sag | Spring rate too soft | Increase spring preload by replacing the preload tube |
| Fork is “sticky”; fork does not perform as new | Dirty sealing rings; fork needs to be serviced | Renew all seals |
| Fork is too soft, but the sag is the one recommended | Compression damping is not enough | Increase compression damping by changing oil volumes |
| Fork is too soft, needs more than the maximum preload | Oil is too fluid | Check oil levels |
| Fork is too soft, needs more than the maximum preload | Spring rate too soft | Change to stiffer spring rate |
| Fork stays down or "packs up" during multiple impacts | Rebound damping is too high | Decrease rebound damping with the relevant register |
| Front wheel tends to tuck under while turning left or right | Rebound damping is too high | Decrease rebound damping with the relevant register |
| Front wheel tends to tuck under while turning left or right | Spring rate too soft | Change to stiffer spring rate |
| Heavy amount of oil on stanchions; oil dripping down legs | Sealing rings damaged | Renew all seals |
| Heavy amount of oil on stanchions; oil dripping down legs | The stanchion tubes could be damaged | Have the stanchions be checked |
| Knocking sound during rebound, but no harsh top-out | Rebound damping is too high | Decrease rebound damping with the relevant register |
| Loss of sensitivity | Old oil | Change the oil |
| Loss of sensitivity | Sliding bushes worn | Renew the sliding bushes |
| Oil leaking from the bottom of the fork leg | Bottom nut/screw loose | Tighten the nut or screw |
| Oil ring on stanchions | Sealing rings dirty | Renew all seals |