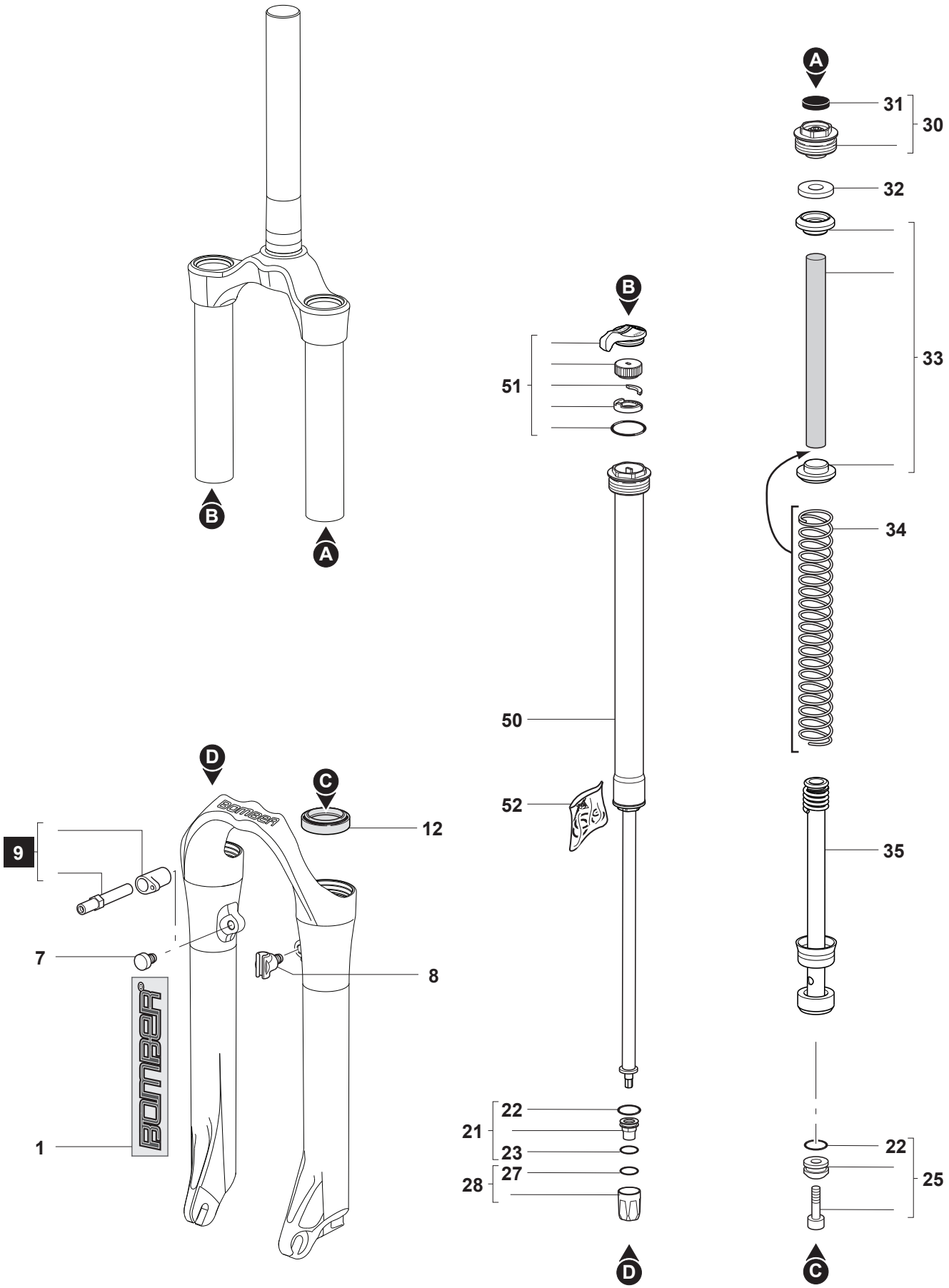
A
31
30
32
33
34
35
22
25
B
51
50
52
21
22
23
28
27
D
C
12
9
7
8
1
BOMBER