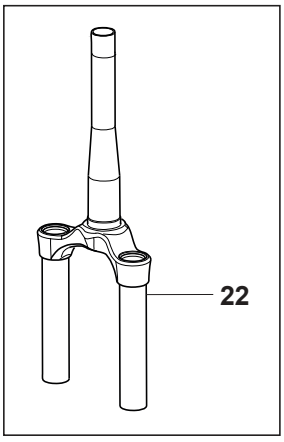
22

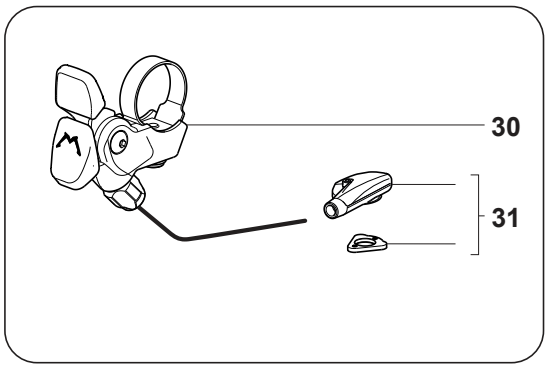
30
31

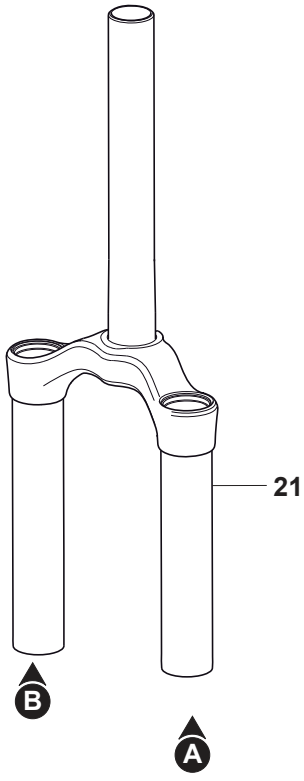
21
B
A

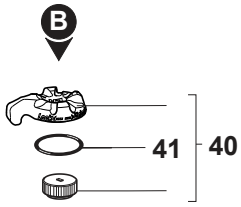
B
41
40

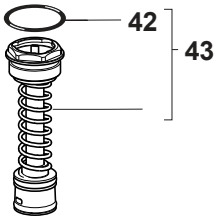
42
43

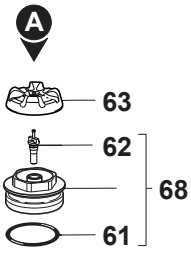
A
63
62
68
61

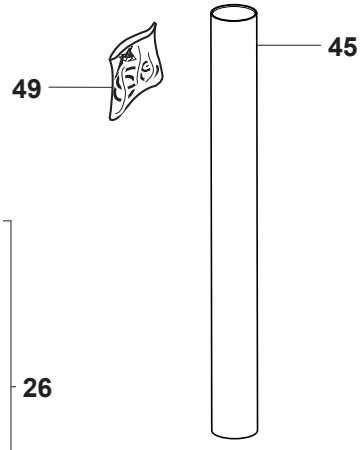
45
49

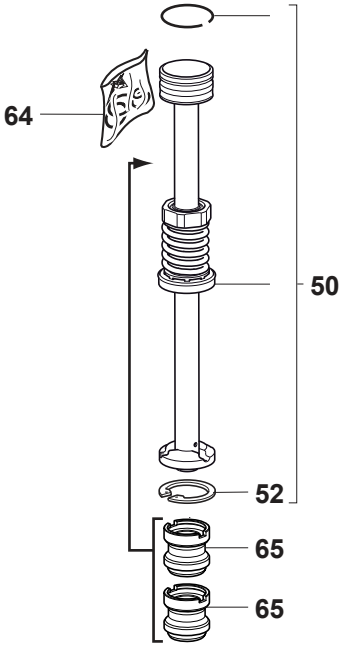
64
50
52
65
65
36
37
C

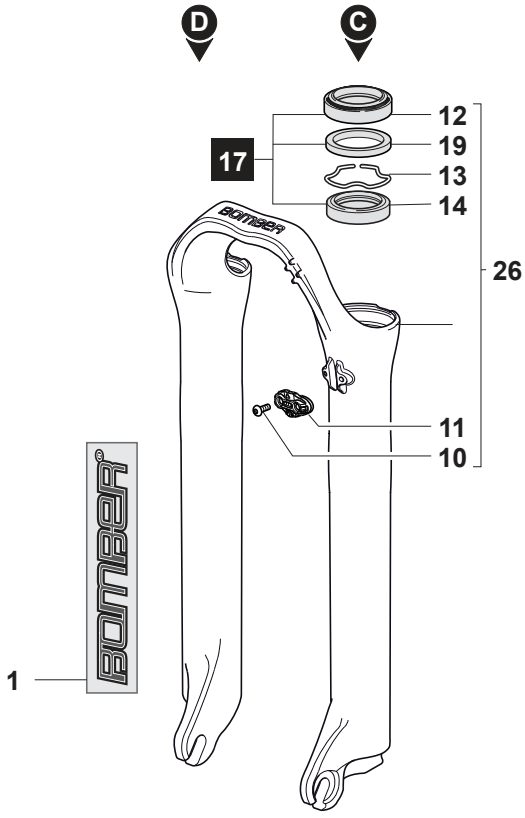
D
C
12
19
17
13
14
26
11
10
1
BOMBER

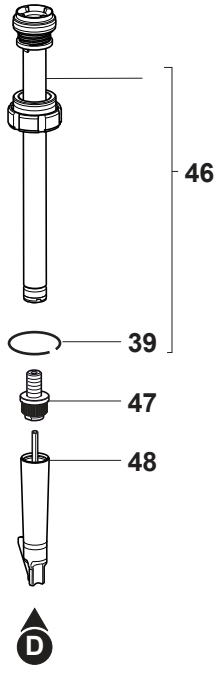
46
39
47
48
D

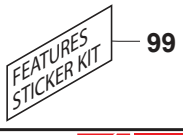
FEATURES
STICKER KIT
99

R.F1.00