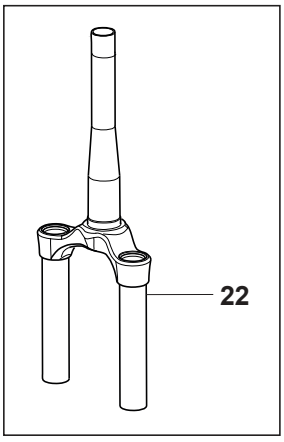
22

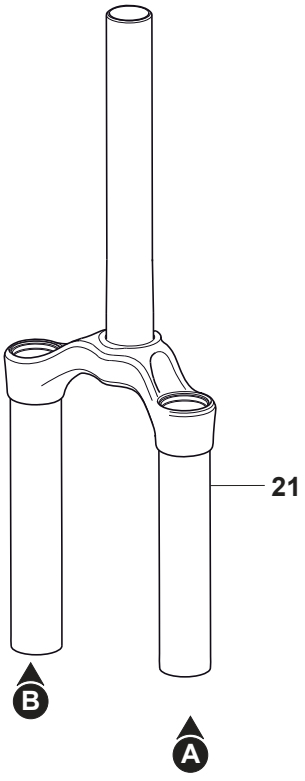
21
B
A

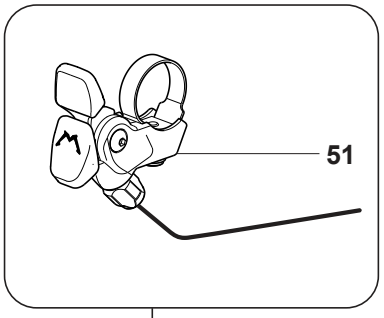
51

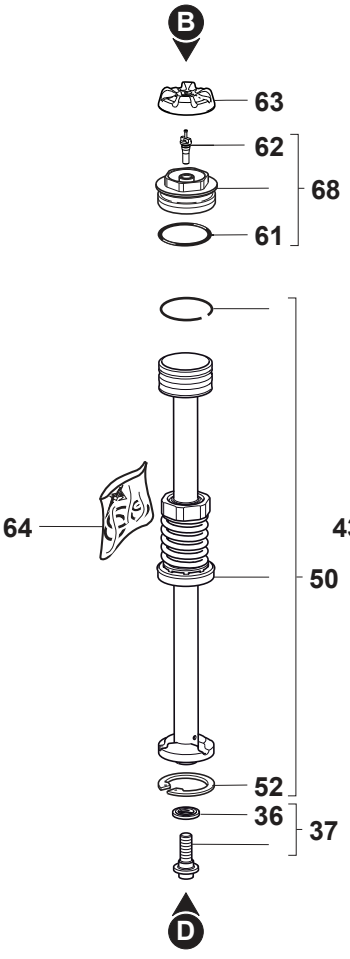
B
63
62
68
61
64
50
52
36
37
D

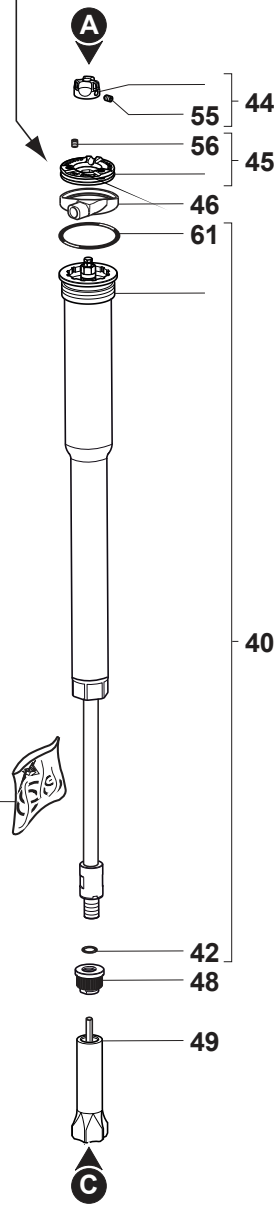
A
44
55
56
45
46
61
40
43
42
48
49
C

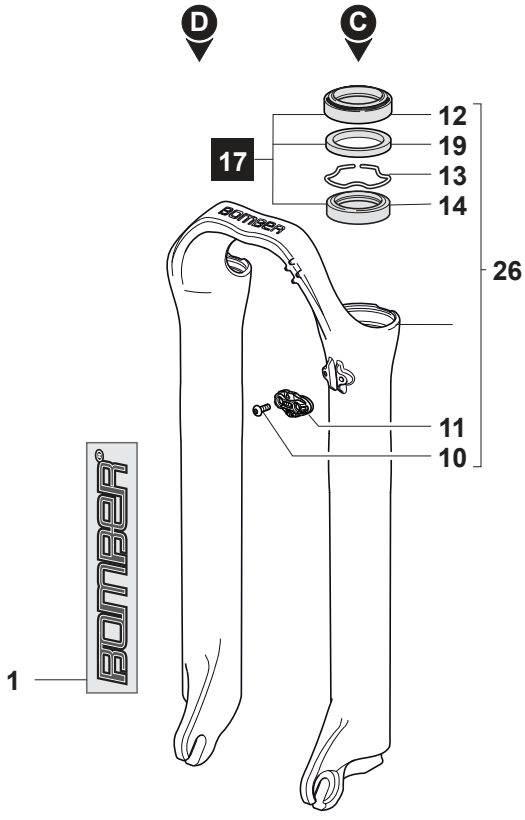
D
C
12
19
17
13
14
26
11
10
1
BOMBER

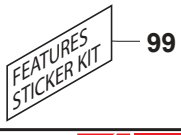
FEATURES
STICKER KIT
99

R.F1.00